White Paper

Inside the Trimble X7:
Deep Dive into Trimble X-Drive Technology

Michael Vogel, Martin Bader, Gregg Jackson, Arnaud Lezennec and Gregory Lepere
Trimble Geospatial, Optical & Imaging

https://geospatial.trimble.com/products-and-solutions/laser-scanning-solutions

Precision Laser & Instrument, Inc.
www.laserinst.com
85 11th Street | Ambridge, PA 15003
724-266-1600 | PLI@laserinst.com

TECHNOLOGY THAT
transforms

Trimble

Wonder why the Trimble X7 looks so different from other scanners?

With no visible mirror assembly, the center unit resembles a total station more than a scanner. The X7 actually has the characteristics of both with the first dual vertical drive system. The system integrates a survey grade servo drive from a total station and a protected high speed scanning mirror to enable features like auto-calibration and much more.

Is automatic self-leveling really meant as physically leveled without user intervention?

Certain scanners can measure leveling in all orientations without requiring a manual physical leveling step but are not accurate. Others can deliver a survey-grade accuracy but involve using a tribrach. The Trimble X7 self-leveling technology provides both full automation for quick setup and survey-grade accuracy for data you can trust.

The purpose of this whitepaper is to explain the technology behind Trimble X-Drive and the many benefits it brings to 3D laser scanning. The following topics will be covered.

- Trimble X7 Center Unit
    - X-Drive Vertical Deflection System
    - Automatic Self-Leveling
    - Integrated Camera System
- Summary of the Features and Benefits

We faced the challenges of 3D scanning. And we solved them. Here’s how.

Trimble X7 Center Unit

The center unit mechanical design drives the technical innovations of the Trimble® X7. The protected center unit integrates a survey-grade servo drive with high speed scanning, internal tilt sensors for self-leveling, a calibrated coaxial camera system for fast image acquisition and a laser pointer to facilitate geo-referencing and single point measurements.

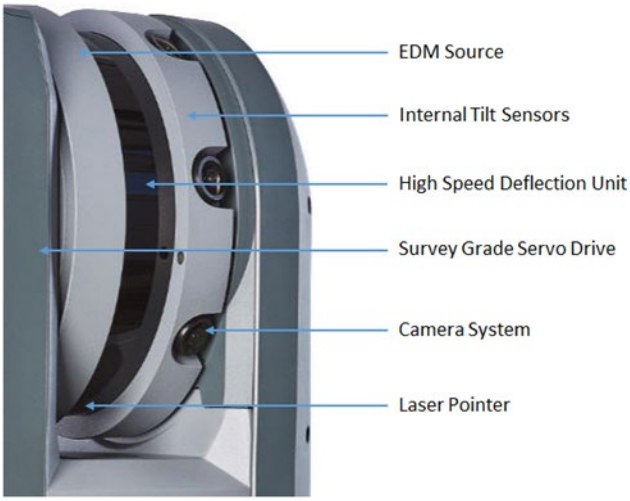

Figure 1: Trimble X7 protected center unit

X-Drive Dual Vertical Deflection System

X-Drive is the world's first dual vertical deflection drive system designed by integrating a survey-grade servo drive with a high speed scanning mirror. The concept of using a Total Station's well known vertical servo system on top of a high speed deflection unit for scanning opens new features like auto-calibration, tilt measurements and laser pointer. A total station vertical drive and angle encoder system is still integrated inside the alidade so the complete center unit including the deflection unit and EDM source can be rotated around the trunnion axis in a traditional way like total stations.

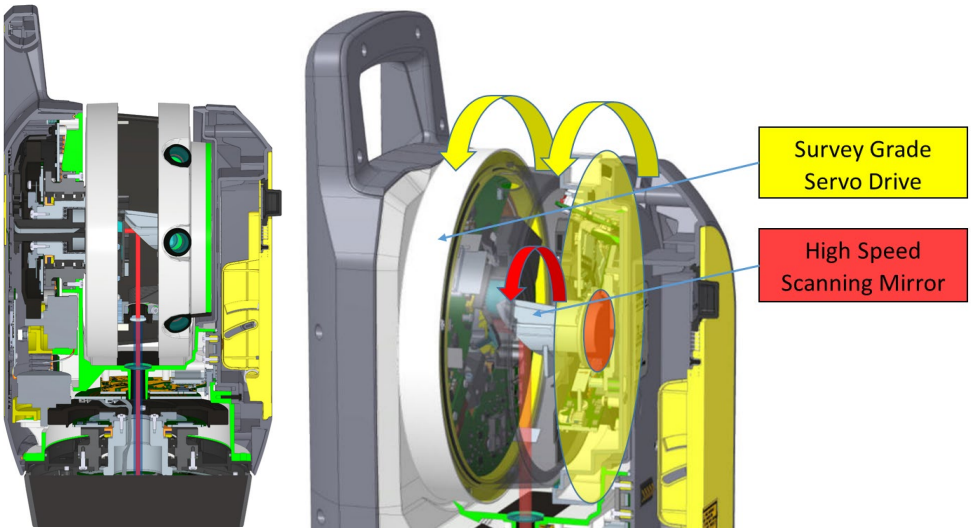

Figure 2: Dual vertical deflection system

The deflection drive is inspired by hard drive motor technology developed specifically for Trimble by industry experts in high quality hard drives. The reliable drive has low friction, vibration and power consumption, and is so quiet you won't hear the scanner running. The long life of the drive reduces maintenance cost and is one reason the Trimble X7 has a two year standard warranty.

Another mechanical feature is the 360° scanner window made from polycarbonate plastic that protects the scanners rotating deflection mirror. This special window is optimized for the EDM wavelength and supporting range and accuracy due to sunlight protection. The window has glass-like transparency but is impact and temperature resistant and perfect for demanding optical applications. The enclosed design helps the Trimble X7 achieve a reliable IP55 rating for dust and water jet ingress protection and safe operation with protection from the high speed rotating deflection mirror.

Figure3: Protective window for rotating deflection mirror

Automatic Self-Leveling

The Trimble X7 performs automatic self-leveling before each scan to automate field workflows. Precise leveling is one key for fast in field scan registration and quality check to reduce errors and save time with minimal user interaction.

Traditionally 3D laser scanners have either been challenging to level within range for survey grade accuracy or unable to effectively achieve survey grade accuracy. Scanners may have accurate sensors but limited range of measurement requiring users to physically level the instrument to achieve survey grade accuracy. This process takes time in the field and a certain level of expertise. Other scanners may have wide range sensors with low accuracy so you can scan from any orientation but you can't achieve survey grade accuracy.

The X7 simplifies leveling with the automatic self-leveling process shown in the steps below.

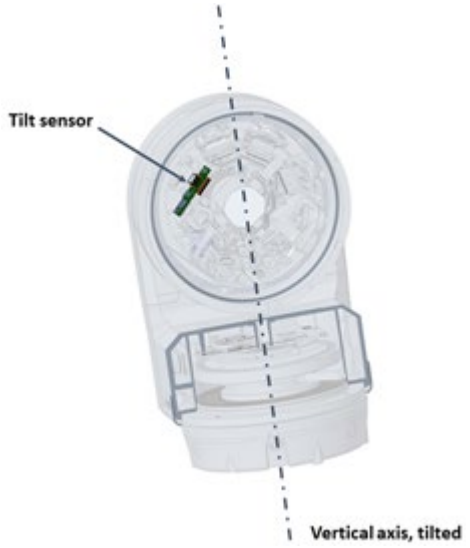

Step 1: Random position of center unit

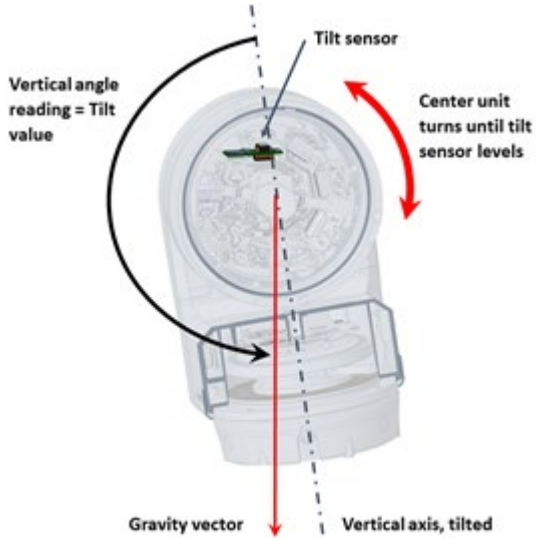

Step 2: Center unit turns until tilt sensor is level

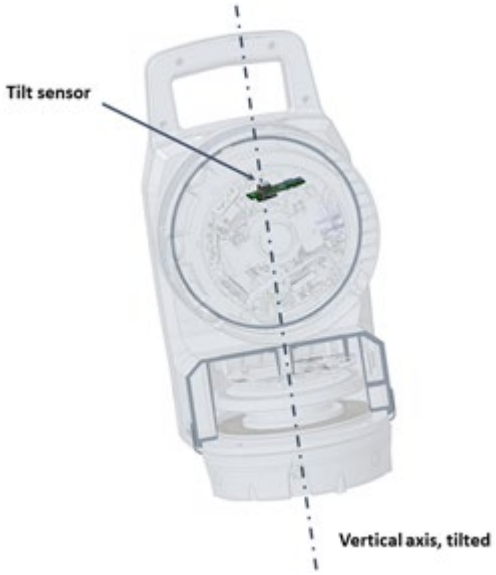

Step 3: Instrument rotates 180° around Hz axis

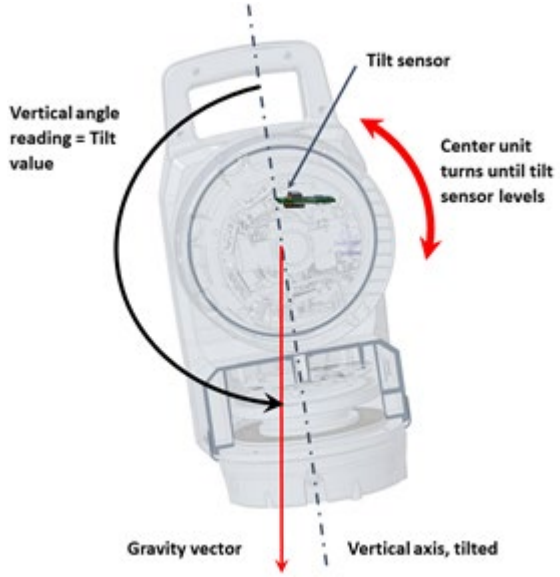

Step 4: Center unit turns until tilt sensor is level for second face reading

The system achieves survey grade tilt compensation if the instrument is setup within a working range up to 10° from either side of its vertical axis for upright and upside down scans. Scans are leveled with survey grade accuracy of < 3” (arc seconds) which is equivalent to 0.3mm @ 20 m. Setup within 10° is easy to achieve, but an option to enable guide lights is available to let users know if the tripod needs to be adjusted. This process is quick in the field and requires no expertise.

Survey grade level data provides proof against survey truth. Self-Leveling will ensure accuracy you can trust without targets or extra control on topographic surveys, floor flatness applications or when monitoring the verticality of columns or walls during construction. For example, the verticality of a 10 m building will have an error of just 0.14 mm and the floor flatness of a 20 m floor will have an error of just 0.3 mm. Without survey grade leveling, some scanners can have > 8mm error at 10 m and >17 mm error at 20m.

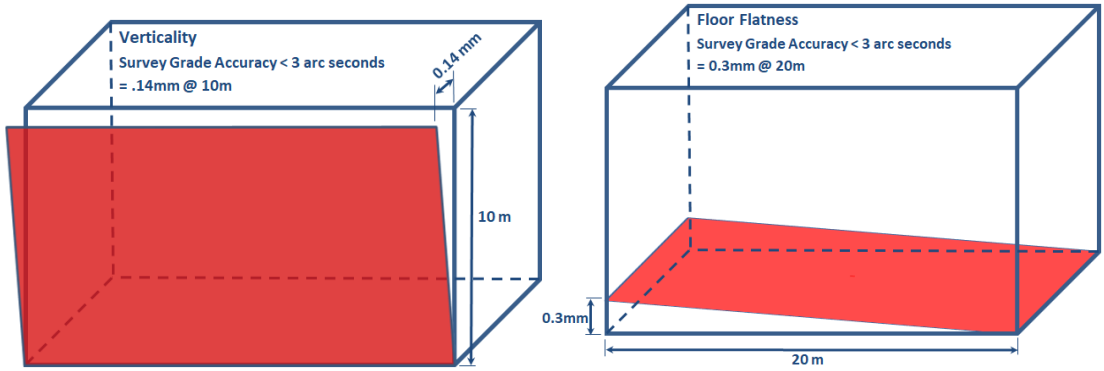

Figure 4: Survey Grade Accuracy

Self-Leveling must be enabled for in field registration. If the Trimble X7 is tilted more than 10° and up to 45° the acquired scan will be roughly leveled but not guaranteed the 3” accuracy. The scan will be flagged as "Not leveled" however the Perspective software can automatically register the scan if there is sufficient overlap with the scan you’re registering to. If the instrument is tilted > 45° from either side of its vertical axis, the Perspective software will display an error message and prevent scan acquisition. When the scanner is upside down and the tilt is within a range of 10°of the vertical axis, the scan will be leveled with survey grade accuracy and flipped automatically for correct orientation. The smart self-leveling also has real time level monitoring to stop scans if tilt is disrupted during scan acquisition.

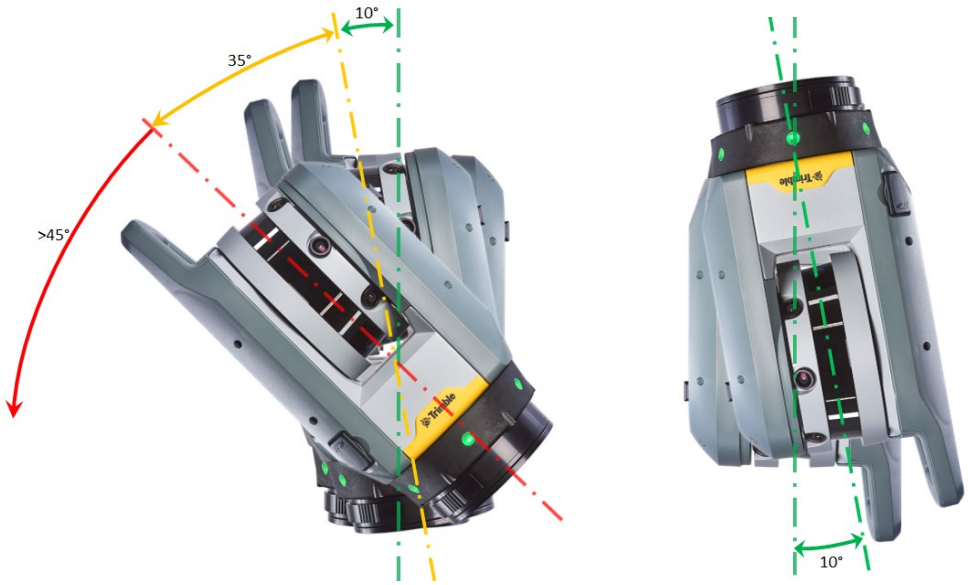

Figure 5: Scanner Orientations for Self-Leveling

Figure 6: Inverted scans leveled with survey grade accuracy.
Photo from Karsten Braun; Dipl. Ing. | Vertriebsingenieur; Beim Erlenwäldchen 8 | D-71522 Backnang

Integrated Camera System

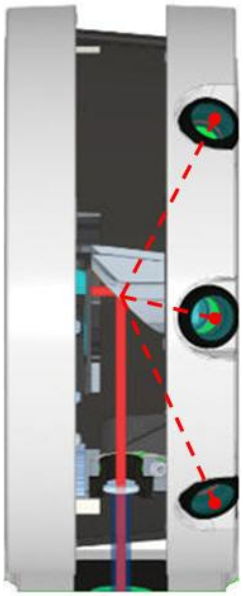

The Trimble X7 integrates a smart coaxial camera system with 3 x 10Mpx cameras. Resolution for each image is 3840 x 2746 pixels, each with a specific field of view to optimize coverage and productivity. The coaxiality of the cameras is given by mechanical design and the alignment of their optical axis to cross the center of our gimbal system to minimize parallax between images and scans.

Image acquisition time depends on the number of images selected. You have the option to capture 15 or 30 images. In normal lighting conditions, it takes one minute to capture 15 images and two minutes to capture 30 images with auto exposure. The 15 image capture takes pictures from six positions (rotating horizontally in 60° increments). The 30 image capture takes pictures from 12 positions (rotating horizontally in 30° increments). 30 images will enhance scan colorization and panorama image quality, especially in complex environments where occlusions are more prevalent. More images will improve coloring and coverage however image capture and processing time will increase. 15 images are sufficient in simple environments where there are fewer occlusions and good quality coverage is possible.

There is also a High Dynamic Range (HDR) imaging mode that acquires two additional images at different exposures from each position and merges the results to achieve a higher range of luminance for more color and detail in bright and dark areas. HDR will take 3 minutes to capture 15 images and 6 minutes to capture 30 images.

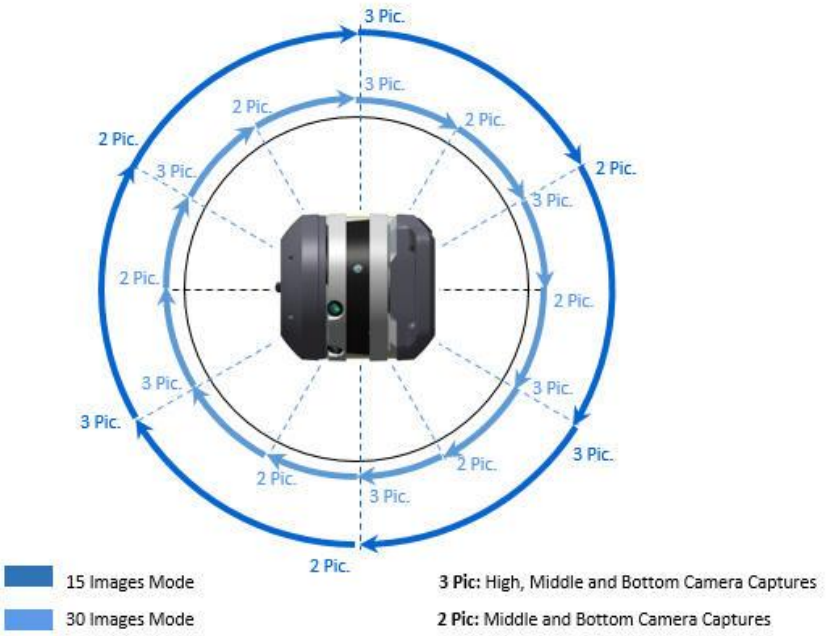

Figure 7: Positions for 15 and 30 image capture

Settings for white balance correction are available to remove unrealistic color casts so objects which appear white in person are rendered white in the image. Proper camera white balance has to take into account the color temperature of a light source, which refers to the relative warmth or coolness of white light. The Auto white balance correction is applied in the software and the indoor and outdoor presets are applied directly by the scanner. Here is a general guide for when to use each setting.

Auto - recommended when lighting conditions are inconsistent

Sunny - outdoors in bright sunlight

Cloudy - outdoors on overcast days

Fluorescent Cool White - indoors when bright fluorescent lighting is present

Incandescent - indoors when more natural incandescent lighting is present

The colorization of scans and the creation of high quality panoramas are done when projects are exported from Perspective. Single scans from the station list can also be processed in the field. Panorama creation will use the real point cloud distance to minimize mismatches and blending will smooth discontinuities between images and avoid object duplication. See samples below of panoramas and colorized scans.

Figure 8: Panorama

Figure 9: Colorized Scans

Summary of Features and Benefits

Features	Benefits
Protected Center Unit	• Integrates high speed deflection unit for scanning, internal tilt sensors, EDM source, camera system and laser pointer in one protected center unit • Optics protection in all weather conditions (IP55) • Safe operation
X-Drive Vertical Deflection Drive	• Integrates survey grade servo drive with high speed scanning • Concept of a vertical servo system enables the entire center unit to rotate around the trunnion axis • Enables automatic calibration and self-leveling • Reliable; long life; low friction, vibration, power consumption and noise • Enables industry leading 2 year warranty
Automatic Self-Leveling	• Survey grade level compensation for both upright and upside down orientations within range of ±10° • Survey grade accuracy <3” = 0.3mm @ 20m • Scans with <45° tilt have coarse grade level accuracy • Real time level monitoring will not allow scan acquisition >45° tilt and will stop scans when level is disrupted • Verify verticality and levelness with confidence • Supports in field registration
Integrated Camera System	• 3 x 10 MP cameras for fast image acquisition of 1-2 min • Quality full panoramas and scan colorization • Calibrated, coaxial cameras with optical axis aligned to center of deflection mirror to minimize parallax between images and scans • HDR and white balance correction to ensure image quality
Laser Pointer	• Geo-referencing • Single point measurements
Automatic Calibration*	• Ensures data accuracy from scan to scan • Angular and distance correction • Alidades encoder system adopted from total stations for precision • Accounts for alignment deviations inside the scanner head and adjusts to vibration and even shock • Smart calibration monitors environmental conditions and instrument temperature and vertical speed • Smart calibration only applies correction when required • No targets or user interaction required • No need for annual calibrations reduces cost of ownership and accelerates ROI • Enables industry leading 2 year warranty

** See the White Paper - Inside Trimble X7 Auto-Calibration for more details on this feature.*

Trimble Inc., 10368 Westmoor Dr, Westminster CO 80021, USA

https://geospatial.trimble.com/products-and-solutions/laser-scanning

© 2020, Trimble Inc. All rights reserved. Trimble, the Globe & Triangle logo are trademarks of Trimble Inc., registered in the United States and in other countries. All other trademarks are the property of their respective owners.